Appendix D: Form-Based Codes

FORM BASE CODE (FBC) a definition

A method of regulating development to achieve a specific urban form. Form-based codes create a predictable public realm primarily by controlling physical form, with a lesser focus on land use, through city or county regulations.

Form-based codes address the relationship between building facades and the public realm, the form and mass of buildings in relation to one another, and the scale and types of streets and blocks. The regulations and standards in FBCs, presented in both diagrams and words, are keyed to a *regulating plan* that designates the appropriate form and scale (and therefore, character) of development rather than only distinctions in land-use types. This is in contrast to conventional zoning's focus on the micromanagement and segregation of land uses, and the control of development intensity through abstract and uncoordinated parameters (e.g., Floor Area Ratio, density or dwellings per acre, yards or setbacks, parking ratios, traffic LOS) to the neglect of an integrated built form. Not to be confused with design guidelines or general statements of policy, Form based codes are regulatory, not advisory.

Form-based codes are drafted to achieve a community vision based on time-tested forms of urbanism. Ultimately, a Form-based code is a tool; the quality of development outcomes is dependent on the quality and objectives of the community plan that a code implements.

Form-based codes commonly include the following elements:

- *Regulating Plan.* A plan or map of the regulated area designating the locations where different building form standards apply based on clear community intentions regarding the physical character of the area.
- *Public Space Standards.* Specifications for the elements within the public realm (e.g., sidewalks, travel lanes, on-street parking, street trees, street furniture, etc.).
- *Building Form Standards.* Regulations controlling the configuration, features, and functions of buildings that define and shape the public realm.
- *Administration.* A clearly defined application and project review process.
- *Definitions.* A glossary to ensure the precise use of technical terms.

Form-based codes also sometimes include:

- *Architectural Standards.* Regulations controlling external architectural materials and quality.

- *Landscaping Standards.* Regulations controlling landscape design and plant materials on private property as they impact public spaces (e.g. regulations about parking lot screening and shading, maintaining sight lines, insuring unobstructed pedestrian movements, etc.).
- *Signage Standards.* Regulations controlling allowable signage sizes, materials, illumination, and placement.
- *Environmental Resource Standards.* Regulations controlling issues such as storm water drainage and infiltration, development on slopes, tree protection, solar access, etc.
- *Annotation.* Text and illustrations explaining the intentions of specific code provisions.

Form-Based Land Development Regulations

Robert J. Sitkowski*
Brian W. Ohm**

I. Introduction

RECENTLY, SEVERAL COMMUNITIES—among them Contra Costa County, California; Arlington County, Virginia; Petaluma, California; Hercules, California; Kendall, Florida; and Azusa, California—have put into place the latest iteration of new urbanist-influenced land development regulations: "form-based codes." The form-based approach to new urbanist land use regulation[1] has, up until recently, been applied mainly in private-covenanted regimes—Kentlands, Seaside, and their progeny—a legal atmosphere quite different from the public regulatory sphere. This moving along the continuum from private to public, of course, starts to reveal the legal issues attendant to these types of regulations. This article serves as an introduction to form-based codes for lawyers, and presents three primary legal issues that arise when local governments begin to enact these design-based land use regulatory tools.

II. What Is a Form-Based Land Development Regulation?

A form-based code is "a land development regulatory tool that places primary emphasis on the physical form of the built environment with the end goal of producing a specific type of 'place'."[2] Standing in con-

*Robert J. Sitkowski, AIA, AICP, is a lawyer at Robinson & Cole, LLP in Hartford, Connecticut, where he practices land use law.

**Brian W. Ohm, J.D., is a Professor in the Department of Urban and Regional Planning at the University of Wisconsin-Madison.

1. *See, e.g.*, AM. PLANNING ASS'N PLANNING ADVISORY SERV., THE ESSENTIAL PAS INFO PACKET—FORM-BASED ZONING (April 2004); CONGRESS FOR THE NEW URBANISM, CODIFYING NEW URBANISM: HOW TO REFORM MUNICIPAL LAND DEVELOPMENT REGULATIONS (2004); Brian W. Ohm & Robert Sitkowski, *The Influence of New Urbanism on Local Ordinances: The Twilight of Zoning?*, 35 URB. LAW. 783 (2003); Kaizer Rangwala, *Form-Based Code: The Farmers Branch Experience*, PRACTICING PLANNER (Fall 2005); Scot Siegal, *Form-Based Codes: Where Do We Go from Here?*, PRACTICING PLANNER (Fall 2005); Bob Sperber, *Function Follows Form*, PROF. BUILDER (Sept. 2005); Jerry Weitz, *Form-Based Codes: A Supportive But Critical Perspective*, PRACTICING PLANNER (Fall 2005).

2. City of Farmers Branch, Codes Project: Frequently Asked Questions, http://www.farmersbranch.info/Planning/codes7FAQs.html (last visited Nov. 21, 2005).

"Form-Based Land Development Regulations" by Robert Sitkowski & Brian Ohm, published in The Urban Lawyer, Volume 28, No.1, Winter 2006. © 2006 by the American Bar Association. Reproduced with permission. All rights reserved. This information or any portion thereof may not be copied or disseminated in any form or by any means or stored in an electronic database or retrieval system without the express written consent of the American Bar Association.

trast to conventional land development regulations (which, it is argued, favor regulating use over form), form-based regulations are designed to place the ultimate form of the development in a superior position to the use to which the property is put. As explained further by planner Paul Crawford, of Crawford Multari & Clark Associates, and a member of the newly constituted Form Based Codes Institute,[3] form-based regulations are:

> Municipal development regulations that go beyond the conventional zoning controls of segregating and regulating land use types and defining building envelopes by setback requirements and height limits. Form-based codes instead address the details of relationships between buildings and the public realm of the street, the form and mass of buildings in relation to one another, and the scale and type of streets and blocks. Form-based codes are based on specific urban design outcomes desired by the community, that may be identified through an inclusive, design-focused public participation process. The regulations in form-based codes are applied to property through "regulating plans" that map the community with geographic designations that are based on the scale, character, intensity, and form of development rather than differences in land uses.[4]

Although form-based regulations, by their nature, are designed to be place-specific, they have a readily identifiable set of component parts—the elements of a form-based land development regulation[5]:

- *The Regulating Plan.* A "key map," akin to but very different from a zoning map, showing the sites for various buildings, street types, build-to lines, and, in some cases, design features.
- *Urban Regulations.* These regulations are commonly presented in the form of a matrix with supporting diagrams covering bulk, height, coverage, and "in-building" use standards, and are generally recognizable as such as they are presented in conventional land development regulations. These standards are organized by building type—rather than land-use type—categories.
- *Street Regulations.* These regulations present, in a graphical form, the width and dimensions of streets, sidewalks, paths, curb heights, street-side parking requirements, allowable turning radii, and other standards applicable to streets. It is an open question whether these standards should be included in the "zoning" regulations in juris-

3. For more information on this organization, see its website at http://www.formbasedcodes.org (last visited Nov. 21, 2005).

4. E-mail from Paul Crawford to Robert Sitkowski (on file with author).

5. This list of elements was derived from Peter Katz, *Form First*, PLAN., Nov. 2004, at 17; Jeremy E. Sharp, An Examination of the Form-Based Code and Its Application to the Town of Blacksburg (Nov. 4, 2004) (unpublished major paper), *available at* http://scholar.lib.vt.edu / theses / available / etd-12172004-140622 / unrestricted / Sharp FINALmajorpaper.pdf (last visited Nov. 21, 2005).

"Form-Based Land Development Regulations" by Robert Sitkowski & Brian Ohm, published in The Urban Lawyer, Volume 28, No.1, Winter 2006. © 2006 by the American Bar Association. Reproduced with permission. All rights reserved. This information or any portion thereof may not be copied or disseminated in any form or by any means or stored in an electronic database or retrieval system without the express written consent of the American Bar Association.

dictions that have a bifurcated zoning/subdivision scheme rather than a unified development ordinance approach.

- *Landscape Regulations.* These provisions govern permitted species, sizes, and locations of trees and other plantings.
- *Architectural Regulations.* These necessarily diagrammatic and graphical regulations govern the building styles, details, and materials that are permitted and the ways in which they can be incorporated into various building elements such as walls, windows, fences, and roofs.

Not every set of form-based land development regulations includes all five of these sections, and some elect not to include the architectural regulations based on the argument that they are the most objectionable from a legal standpoint.

III. The Legal Issues

Because this article presents a newly evolving type of regulation, it is beneficial and responsible to step back and look at fundamental legal principles that underpin how local land development regulations are enabled, written, and administered. This article addresses three of these: authorization (the manner in which these new types of regulations are enabled), discretion (the manner in the regulations are written), and delegation (the manner in which the regulations are administered).

A. *Authorization*

It is appropriate to begin an examination of the legal considerations with the status of enabling legislation for regulations designed to promote "traditional neighborhood development" in general and form-based regulations specifically. As described in an earlier article,[6] Pennsylvania and Wisconsin explicitly provide that local governments are enabled to promulgate "traditional neighborhood" regulations as part of their zoning powers, when the legislatures determined that express enabling legislation was required to prompt their local units of government to enact land development regulations that would promote new urbanist forms of development. In addition, the Connecticut legislature has promulgated a wide-ranging community character regulation, the "Village Districts Act," that could be used to support the enactment of new urbanist-influenced land development regulations.[7]

6. *See also* Robert Sitkowski & Brian Ohm, *Enabling the New Urbanism*, 34 URB. LAW. 935 (2002).
7. CONN. GEN. STAT. § 8–2j (2004).

"Form-Based Land Development Regulations" by Robert Sitkowski & Brian Ohm, published in The Urban Lawyer, Volume 28, No.1, Winter 2006. © 2006 by the American Bar Association. Reproduced with permission. All rights reserved. This information or any portion thereof may not be copied or disseminated in any form or by any means or stored in an electronic database or retrieval system without the express written consent of the American Bar Association.

However, there has been one significant development in this realm of specific enabling legislation since that earlier article. On July 20, 2004, California Governor Arnold Schwarzenegger signed Assembly Bill No.1268, which expressly authorizes form-based regulatory techniques. This law authorizes the text and diagrams in a general plan's land-use element that address the location and extent of land uses, and the zoning ordinances that implement these provisions, to express community intentions regarding urban form and design in the following way:

> The text and diagrams in the land use element that address the location and extent of land uses, and the zoning ordinances that implement these provisions, may also express community intentions regarding urban form and design. These expressions may differentiate neighborhoods, districts, and corridors, provide for a mixture of land uses and housing types within each, and provide specific measures for regulating relationships between buildings, and between buildings and outdoor public areas, including streets.[8]

In states other than California, Pennsylvania, Wisconsin, and, perhaps, Connecticut, one might argue that a form-based approach might be difficult to implement in the short term since the primary legal problem with this approach is that most state enabling statutes take land *use*, and not *form* of development, as their touchstone. Accordingly, since many of the enabling statutes around the country are, in one form or another, still rooted in the 1926 Standard State Zoning Enabling Act (SSZEA) provisions, it is worth examining some of those provisions to see whether they support a form-based approach. Not surprisingly, they do.

The "Grant of Power" provisions in the SSZEA include the following:

- height, number of stories, and size;
- lot coverage;
- yards, courts, and other open spaces;
- density; and,
- location and use of structures and land.[9]

This list of the contours of the grant of power to local government explicitly considers form of development; i.e., coverage, setbacks, height, number of stories, density, and location of structures. It also authorizes regulation by use of structures and land, and describes use

8. CAL. GOV'T CODE § 65302.4 (2005).
9. ADVISORY COMM. ON ZONING, U.S. DEP'T OF COMMERCE, A STANDARD STATE ZONING ENABLING ACT (1926), http://www.planning.org/growingsmart/pdf/SZEnablingAct1926.pdf, at 4 (last visited Nov. 21, 2005).

"Form-Based Land Development Regulations" by Robert Sitkowski & Brian Ohm, published in The Urban Lawyer, Volume 28, No.1, Winter 2006. © 2006 by the American Bar Association. Reproduced with permission. All rights reserved. This information or any portion thereof may not be copied or disseminated in any form or by any means or stored in an electronic database or retrieval system without the express written consent of the American Bar Association.

in the broadest terms of commercial, residential, and industrial. The list does not preclude the consideration of form in local land regulation.

The "Purposes in View" provisions of the SSZEA include the following purposes of zoning regulation:

- that it be "In Accordance with a Comprehensive Plan";
- lessen congestion in the streets;
- secure safety from fire, panic, and other dangers;
- promote health and general welfare;
- provide adequate light and air;
- prevent overcrowding of land;
- avoid undue concentration of population; and,
- facilitate adequate provision of public requirements.[10]

Again, none of these purposes of regulations limit the regulation to the use of land. In fact, one additional item in the SSZEA's list of purposes puts a finer point on this issue: "Such regulations shall be made with reasonable consideration, among other things, to the character of the district and its peculiar suitability for particular uses, and with a view to conserving the value of buildings and encouraging the most appropriate use of land throughout the municipality."[11]

This provision appropriately balances the use of land and the form of development, i.e., character of the district. Contrary to conventional belief, then, the SSZEA is not exclusively use-based; indeed, it does not arguably show a preference for use over form. Accordingly, there should be sufficient support for a form-based approach in even the SSZEA-influenced states.[12] Additional support for form-based land development regulations may be found in other enabling laws, such as subdivision regulation enabling laws and architectural district enabling laws.

Also contrary to conventional belief, form-based land-use development regulations do not "toss out" uses as a means of regulation. By way of example, uses are presented in the Smart Code[13] as "Building Function Standards." The Smart Code is an extraordinarily ambitious

10. *Id.* at 6.
11. *Id.* at 7.
12. It should be noted, however, that the "Uniformity Clause" of the SSZEA may pose an implementation issue. *See, e.g.*, BRIAN W. BLAESSER, DISCRETIONARY LAND USE CONTROLS: AVOIDING INVITATIONS TO ABUSE OF DISCRETION § 8:43 (2005).
13. Duany Plater-Zyberk & Company, Smart Code, http://www.dpz.com/pdf/SmartCodeV7.0–6-06–05.pdf (last visited Nov. 21, 2005). Portions of the Smart Code have been adopted or are being considered for adoption in various locations around the country; *see also* PlaceMakers, http://www.placemakers.com/info/SCdownloads.html (last visited Nov. 21, 2005).

"Form-Based Land Development Regulations" by Robert Sitkowski & Brian Ohm, published in The Urban Lawyer, Volume 28, No.1, Winter 2006. © 2006 by the American Bar Association. Reproduced with permission. All rights reserved. This information or any portion thereof may not be copied or disseminated in any form or by any means or stored in an electronic database or retrieval system without the express written consent of the American Bar Association.

model form-based code promulgated by Duany Plater-Zyberk & Company that can also be considered a planning document presenting an alternative regulatory framework. The Smart Code is based on a physical organizing system described as "The Transect"—a continuum of human habitation from urban core to rural.[14] The Building Function Standards are presented in a very simple table that is designed to be flexible, letting the market decide what goes on inside the building types. Local form-based codes cannot dispense with uses for another reason—overriding federal statutes such as the Fair Housing Amendments Act, the Telecommunications Act of 1996, and RLUIPA, which are explicitly use-based.

Form-based land development regulations, like all land-use regulations, must also satisfy the requirements of substantive due process. Since they are exercises of the police power, form-based land development regulations must advance legitimate governmental interests that serve the public health, safety, morals, and general welfare. A majority of jurisdictions in the United States now accept aesthetic considerations, either alone or in conjunction with other legitimate objectives, as a proper goal in the exercise of the state's police power, which is critical in those cases where the local government seeks to operationalize the "Architectural Regulations" portion of a form-based land development regulation.[15] A minority of the states recognizing aesthetics

14. *See* Andres Duany & Emily Talen, *Making the Good Easy: The Smart Code Alternative*, 29 FORDHAM URB. L.J. 1445 (2002); Andres Duany & Emily Talen, *Transect Planning*, 68 J. AM. PLAN. ASS'N 245 (Summer 2002); *see also* J. URB. DESIGN (SPECIAL ISSUE), Oct. 2002 (containing seven papers examining applications of The Transect); Philip Langdon, *Zoning Reform Advances Against Sprawl and Inertia*, NEW URB. NEWS, Jan./Feb. 2003.

15. *See e.g.*, Paul Weinberg, *Zoning for Aesthetics—Who Decides What Your House Will Look Like?*, 28 ZONING & PLAN. L. REP. (Oct. 2005); Lane Kendig, *Too Big, Boring or Ugly: Planning and Design Tools to Combat Monotony, the Too-Big House, and Teardowns*, AM. PLAN. ASS'N PLAN. ADVISORY SERVICE REP. (2004); Elizabeth A. Garvin & Glen S. LeRoy, *Design Guidelines: The Law of Aesthetic Controls*, 55 LAND USE L. & ZONING DIG. 3 (Apr. 2003); Julie A. Tappendorf, *Architectural Design Regulations: What Can a Municipality Do to Protect Against Unattractive, Inappropriate, and Just Plain Ugly Structures?*, 34 URB. LAW. 961 (2002); Lee R. Epstein, *Where the Yards Are Wide: Have Land Use Planning and Law Gone Astray*?, 21 WM. & MARY ENVTL. & POL'Y REV. 345 (1997); Douglas C. French, *Cities Without Soul: Standards for Architectural Controls with Growth Management Objectives*, 71 U. DET. MERCY L. REV. 267 (1994); Shawn G. Rice, *Zoning Law: Architectural Appearance Ordinances and the First Amendment*, 76 MARQ. L. REV. 439 (1993); James P. Karp, *The Evolving Meaning of Aesthetics in Land Use Regulation*, 15 COLUM. J. ENVTL. L. 307 (1990); Kenneth Regan, *You Can't Build That Here: The Constitutionality of Aesthetic Zoning and Architectural Review*, 58 FORDHAM L. REV. 1013 (1990); Samuel C. Poole & Ilene Katz Kobert, *Architectural Appearance Review Regulations and the First Amendment: The Constitutionally Infirm "Excessive Difference" Test*, 12 ZONING & PLAN. L. REP. (Jan. 1989).

"Form-Based Land Development Regulations" by Robert Sitkowski & Brian Ohm, published in The Urban Lawyer, Volume 28, No.1, Winter 2006. © 2006 by the American Bar Association. Reproduced with permission. All rights reserved. This information or any portion thereof may not be copied or disseminated in any form or by any means or stored in an electronic database or retrieval system without the express written consent of the American Bar Association.

as a legitimate target of regulation abide by what is termed the "traditional view": aesthetic considerations alone are not a sufficient justification for the exercise of the police power. In these "aesthetics-plus" jurisdictions, the courts might strike a regulation whose sole purpose is to protect aesthetic values, unless express enabling legislation exists.

Aesthetic regulations generally come in two varieties. "Anti-look-alike" regulations provide that a new building may not be too similar to existing dwellings in the area. Other regulations, on the other hand, provide that new buildings may not be too dissimilar from existing buildings, adopting a "look alike" requirement, a variant of the now-familiar "compatibility" standard. Both types of regulations have increasingly been upheld, with many cases citing the well-known U.S. Supreme Court pronouncement in *Berman v. Parker*[16]:

> The concept of the public welfare is broad and inclusive. The values it represents are spiritual as well as physical, aesthetic as well as monetary. It is within the power of the legislature to determine that the community should be beautiful as well as healthy, spacious as well as clean, well-balanced as well as carefully patrolled.[17]

Form-based land development regulations, though, create a wrinkle in the established "anti-look alike"/ "look-alike" continuum because the primary focus of the regulations is not on individual buildings, but on the "Public Realm," the *tout ensemble* of the façades of "fabric" and "focus" buildings and the design of all manner of the public spaces in between. The Supreme Court's decision in *City of Los Angeles v. Taxpayers for Vincent* cemented the Court's view that aesthetics are a proper focus of governmental regulation, which could arguably support considerations of the design of the public realm.[18]

B. *The Discretion/Prescription Continuum*

Form-based land development regulations must also comport with the principles of procedural due process, i.e., they must contain sufficiently detailed and meaningful standards in order to alert applicants to what is expected of them while allowing sufficient discretion in the decision-making body to determine the approval of an application. Otherwise, these regulations may fall prey to the void for vagueness doctrine.

Most form-based "urban" regulations that are prescriptive can certainly survive this test, but the issue really presents itself in the architectural standards, which may be necessary in many cases to achieve

16. 348 U.S. 26 (1954).
17. *Id.* at 33.
18. *See* 466 U.S. 784 (1984).

"Form-Based Land Development Regulations" by Robert Sitkowski & Brian Ohm, published in The Urban Lawyer, Volume 28, No.1, Winter 2006. © 2006 by the American Bar Association. Reproduced with permission. All rights reserved. This information or any portion thereof may not be copied or disseminated in any form or by any means or stored in an electronic database or retrieval system without the express written consent of the American Bar Association.

the goal. Given the demands of some proponents for design specificity, especially in the architectural regulations, there is another problem. Highly detailed standards are not much of an administrative problem in the early new urbanist "codes" since they are overwhelmingly privately enforced. But the same standards, if contained in a duly adopted set of regulations, may be so detailed, in some extreme cases, to rise to the level of a prior restraint on expressive activity in derogation of the First Amendment to the U.S. Constitution. One way to avoid such problems may be to focus on the form-based regulation as a tool to shape public space rather than as a "mere" architectural design regulation. After all, one could argue, government has a duty to promote and maintain a healthy and safe public realm.[19]

Given this choice between discretion and prescription, many localities have tried to land somewhere in the middle by using a "Design Guidelines" regime. While some governments have created sufficiently detailed guidelines for their historic districts, neighborhood conservation districts, or gateway/main streets, many others have tried to address design issues without the requisite discipline. Design guidelines established in the latter manner often have several problems, which are neatly summed up in the following observation: "Design Guidelines can prove to be a legal minefield. Guidelines are a combination of law and design administered by committee and applied to a property owner seeking development approval. The number of imaginable problems with this scenario is immeasurable."[20]

Problems can arise when the guidelines are vaguely described and there is a delegation of authority to bodies to make decisions on nothing more than the board members' subjective tastes. Also, when design guidelines are advisory only, there is a tendency to not take them seriously, or, at best, to not know how they are to govern a particular proposal. Accordingly, the courts may have a hard time grappling with this middle ground "solution."[21]

While prescriptive architectural standards in a form-based regulation are not without their problems in built areas,[22] such standards may be

19. BLAESSER, *supra* note 12, § 8:50 (examines issues related in determining the areas to which the public realm might apply).

20. Garvin & LeRoy, *supra* note 15, at 6.

21. *See* Anderson v. Issaquah, 851 P.2d 744, 752 (Wash. Ct. App. 1993) (vague design standards unconstitutional). *But see* Novi v. City of Pacifica, 215 Cal. Rptr. 439, 441 (Cal. Ct. App. 1985) (some vagueness inherent and acceptable in design standards).

22. *See* BLAESSER, *supra* note 12, § 8:48–49; *see also* JONATHAN BARNETT & BRIAN BLAESSER, DEFENSIBLE DESIGN REVIEW: DESIGNING NEW AND RESHAPING EXISTING PATTERNS OF DEVELOPMENT (AICP Training CD-ROM, 2003).

"Form-Based Land Development Regulations" by Robert Sitkowski & Brian Ohm, published in The Urban Lawyer, Volume 28, No.1, Winter 2006. © 2006 by the American Bar Association. Reproduced with permission. All rights reserved. This information or any portion thereof may not be copied or disseminated in any form or by any means or stored in an electronic database or retrieval system without the express written consent of the American Bar Association.

necessary from a legal standpoint given the void for vagueness doctrine. The resistance to prescriptive design regulations seems to be less legal than practical and political.

C. *Delegation*

The final fundamental legal principle is delegation. Consideration must be given to the administrative body tasked with evaluating specific proposals made under the land development regulations given that, in virtually all circumstances, a form-based regulation will not have been seen, let alone administered, by local government staff. It is naïve to argue that, if the regulations are extraordinarily prescriptive, they are self-implementing in the local government context. Somebody in local government still needs to administer and interpret the regulations.

Given the design orientation of form-based regulations, the body logically best equipped to review and make substantive decisions in applications would be an Architectural Review Board. These bodies, however, have been assailed as mere "pretty committees." Thus, they may have their own problems with enabling, and raise the specter of abuses of discretion given the subjectivity inherent in administering any type of design-based regulation.

One way this issue has been handled has been the creation of the position of "Town Architect." This local government employee, be it in-house or hired as an outside consultant, serves a gate-keeping function as a person familiar with new urbanist design and form-based regulations who reviews applications and makes reports to the decision-making bodies. The legal issue with this position is how much decision-making authority can be delegated to this person—the Town Architect, while critical to the application review process, cannot be so powerful as to amount to a proxy for the decision-making body.

IV. Conclusion

Form-based land development regulations present the most recent evolution of new urbanist codes. They are another tool available to local governments to use in implementing New Urbanism objectives. While the article describes three principal legal issues associated with form-based land development regulations that must be considered, there are also three practical implementation issues. First, the fact that these regulations have their root in private-covenanted regimes may create friction as legal constraints are raised that were not experienced before. Second, the application of form-based land development regulations to the built condition raises issues of nonconformities and vested rights,

"Form-Based Land Development Regulations" by Robert Sitkowski & Brian Ohm, published in The Urban Lawyer, Volume 28, No.1, Winter 2006. © 2006 by the American Bar Association. Reproduced with permission. All rights reserved. This information or any portion thereof may not be copied or disseminated in any form or by any means or stored in an electronic database or retrieval system without the express written consent of the American Bar Association.

especially in the context of architectural regulations. Finally, the determination must be made of the appropriate balance between the degree of prescription required to create the desired physical result and the amount of discretion necessary to find solutions to problems that could not be anticipated when the regulations were drafted.

"Form-Based Land Development Regulations" by Robert Sitkowski & Brian Ohm, published in The Urban Lawyer, Volume 28, No.1, Winter 2006. © 2006 by the American Bar Association. Reproduced with permission. All rights reserved. This information or any portion thereof may not be copied or disseminated in any form or by any means or stored in an electronic database or retrieval system without the express written consent of the American Bar Association.

THE NEW
PLEASANT HILL BART
STATION PROPERTY CODE

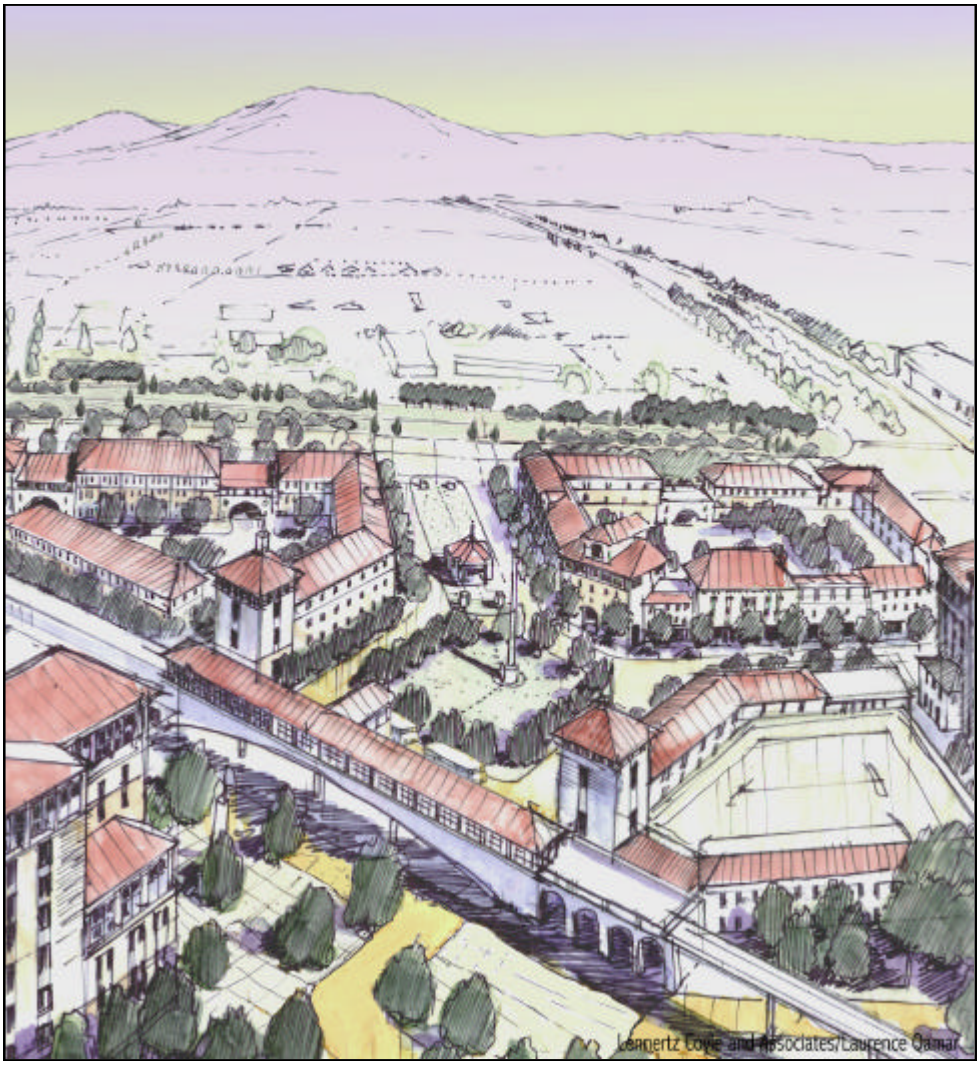

PRINCIPLES AND REGULATIONS FOR REDEVELOPMENT OF THE BART STATION PROPERTY

LENNERTZ COYLE AND ASSOCIATES, L.L.C., MASTERPLAN
GEOFFREY FERRELL ASSOCIATES, L.L.C., CODE WRITER

TABLE OF CONTENTS

I. COMPONENTS OF THE CODE 3

II. DEFINITIONS 5

III. THE REGULATING PLAN 10
- A. UNDERSTANDING THE REGULATING PLAN 11

IV. BUILDING ENVELOPE STANDARDS 12
- A. WORKPLACE BUILDING SITES 14
- B. SHOPFRONT BUILDING SITES 17
- C. RESIDENTIAL FLAT SITES 20
- D. TOWNHOUSE SITES 23

Image by Steve Price, Urban Advantage

Components of the PLEASANT HILL BART STATION PROPERTY CODE

The Pleasant Hill BART Station Property plan is designed to foster a vital *public life* through its squares and tree-lined streets overlooked by upper storey residential balconies. The redevelopment of the Pleasant Hill BART Station Property is governed by the Pleasant Hill BART Station Property Code, which is designed to achieve these goals in concert with the techniques and scale of 21st century development.

While the **Pleasant Hill BART Station Property Masterplan** provides a citizen endorsed urban design for the improvement of all properties in its study area, configurations shown for the Bay Area Rapid Transit Authority (BART) properties can be considered conceptual vision statements only and no commitment has been made on or by BART. Within this Code, BART structures are considered to be CIVIC BUILDINGS and are thereby not constrained by its prescriptions.

The Pleasant Hill BART Station Property Code is comprised of: Definitions, the BART Station Property REGULATING PLAN, and the BUILDING ENVELOPE STANDARDS. The other document that comprises the Code is the ARCHITECTURAL STANDARDS.

A. DEFINITIONS

Certain terms in the Code are used in very specific ways, often excluding some of the meanings of common usage. Wherever a word is in SMALL CAPITAL format, consult the definitions for the specific meaning.

B. THE BART STATION PROPERTY REGULATING PLAN

The REGULATING PLAN is the Coding Key for the BART Station Property that provides specific information for the disposition of each building site. The REGULATING Plan also shows how each lot relates to the public spaces (STREETS, GREENS, parks, PEDESTRIAN PATHWAYS, etc.) and the surrounding environment. There may be additional design guidelines for lots in special locations as identified in the REGULATING PLAN.

C. THE BUILDING ENVELOPE STANDARDS

The Pleasant Hill BART Station Property BUILDING ENVELOPE STANDARDS establish the basic parameters governing building form, including the envelope for building placement (in three dimensions) and certain permitted/required building elements, such as balconies, and STREET WALLS. The BUILDING ENVELOPE STANDARDS establish both the boundaries within which things may be done -- and specific things that must be done. The applicable STANDARD for a building is determined by its STREET FRONTAGE. This produces a coherent STREET and allows the building a greater latitude behind the street-facade.

The technique of the Pleasant Hill BART Station Property BUILDING ENVELOPE STANDARDS is to use private buildings to shape a vital *public space*. They aim for the minimum level of control necessary to meet that goal. Deviations to the Pleasant Hill BART Station Property BUILDING ENVELOPE STANDARDS can be granted only where the unique physical circumstance of a site makes compliance unreasonable and the specific deviation granted is consistent with the intent of the Standard.

THE PLEASANT HILL BART STATION PROPERTY ARCHITECTURAL STANDARDS

THE ARCHITECTURAL STANDARDS

The goal of the Pleasant Hill BART Station Property Architectural Standards is a coherent and pleasing architectural character that is consistent with the best local traditions. The Architectural Standards govern a building's architectural elements regardless of location and set the parameters for allowable materials, configurations, and construction techniques. Equivalent or better products than those specified are always encouraged and may be submitted for approval to the TOWN ARCHITECT.

THE LANDSCAPE STANDARDS

The purpose of the Landscape Standards is to ensure coherent BART Station Property streets and to assist builders and owners with understanding the relationship between the PUBLIC SPACE and their own properties. These Standards set the parameters for planting of trees on or near each building site and overlay the prescriptions of the Specific Plan.

THE ARCHITECTURAL REVIEW PROCEDURE

The role of the Pleasant Hill BART Station Property Town Architect (the TOWN ARCHITECT) has been established to administer an ARCHITECTURAL REVIEW procedure for the development of properties within the BART Station Property area. It is the responsibility of the TOWN ARCHITECT to review architectural and landscape plans for compliance with the Pleasant Hill BART Station Property Code and to provide design guidance when necessary. The TOWN ARCHITECT shall be responsible for interpreting and enforcing the Pleasant Hill BART Station Property Code regarding architectural and landscape standards, as well as any other standards not otherwise addressed and regulated by the County Code.

Wherever there appears to be a conflict between these Codes and Title 8 of the County Ordinance Code, the Pleasant Hill BART Station Property Codes (Planned Unit District) shall prevail. For development standards not covered by these Codes, Title 8 shall be used as a guideline.

THE NEW PLEASANT HILL BART STATION PROPERTY CODE

DEFINITIONS

Certain terms in the Code are used in very specific ways, often excluding some of the meanings of common usage. Wherever a word is printed in SMALL CAPITAL LETTERS, it is being used as defined herein.

ALLEY

The vehicle passage-way within the block that provides access to the rear of buildings, vehicle parking (e.g., garages), utility meters, recycling and garbage bins.

ARCADE

A roofed or built structure, extending over the sidewalk or SQUARE, open to the STREET except for supporting columns, piers, or arches. Residential or office units may occupy the space over the ARCADE. ARCADES shall have, at the sidewalk (STREET), a minimum clear height of 11 feet (signage or lighting may encroach) and a minimum clear width (from frontage or REQUIRED BUILDING LINE (RBL) to inside column face) of 10 feet. The area within an ARCADE shall be open to all public access. Supporting Column/Pier shall be located no more than 20" from the back of the curb (minimum 60" Public access easement/sidewalk within the ARCADES' clear width). Where an ARCADE is built the requirement for STREET TREES is waived for that STREET FRONTAGE.

BALCONY

The exterior platform attached to the front of the main building (the REQUIRED BUILDING LINE (RBL) or STREET side). Required BALCONIES, as defined in the BUILDING ENVELOPE STANDARDS, must be roofed and enclosed by balustrades (railings) and posts that extend up to the roof and shall not be otherwise enclosed above a height of 40" except with insect screening. BALCONIES aligned vertically on adjacent floors may post up to one another and share a single roof element.

BUILDABLE AREA

The area of the lot within which buildings will sit. The BUILDABLE AREA sets the limits of the building footprint now and in the future -- additions must be within the designated area. This provides for construction in a manner consistent with the Pleasant Hill BART Station Property's urban design goals

BUILDING CORNER

This refers to the outside corner of a building (where the *building* mass is within an angle less than 180 degrees. Some of the proscriptions of the BUILDING ENVELOPE STANDARDS are specific to BUILDING CORNERS. Inside corners, where the *exterior* space is within an angle less than 180 degrees, are not considered BUILDING CORNERS.

BUILDING ENVELOPE STANDARDS

The BUILDING ENVELOPE STANDARDS establish the basic parameters governing building construction. This includes the envelope for building placement (in 3 dimensions) and certain required/permitted building elements, such as BALCONIES and STREET WALLS.

COMMON LOT LINES

Lot lines shared by private lots, generally side lot lines.

CIVIC USE

CIVIC USES are community uses open to the public including: meeting halls, libraries, schools, child care centers, police stations, fire stations, post offices (retail operations only, no primary distribution facilities), religious halls, museums, cultural societies, visual and performance arts, transit centers (including BART stations), and government (purely bureaucratic offices not included) functions, especially those involving the public. CIVIC USE is an allowed use for any site.

CIVIC BUILDINGS AND MONUMENTS

CIVIC BUILDINGS AND MONUMENTS are those structures located on the sites designated on the REGULATING PLAN and include the BART structures. Other than location, they are not governed by this Code. The architecture of CIVIC BUILDINGS AND MONUMENTS should reflect the citizens' highest aspirations for their city.

DORMERS

Dormers are permitted and do not count against the building storey-height restrictions, so long as they do not break the main eaves line, and are individually less than 15 feet wide and collectively less than 30% of the unit's REQUIRED BUILDING LINE facade.

FENESTRATION

An opening in the building wall allowing light and views between interior and exterior. FENESTRATION is measured as glass area (including muntins excluding mullions) for occupied buildings and as open area for parking structures

GARAGE ENTRY

An opening (with curb cut) in the building façade and or STREET WALL where vehicles may enter the block interior for general parking and business servicing. GARAGE ENTRYS shall not exceed 14 feet clear height and 24 feet clear width (those existing prior to 2000 are excepted) and shall not be sited within 200 feet of another GARAGE entry on the same block.

PEDESTRIAN PATHWAY

PEDESTRIAN PATHWAYS are interconnecting paved walkways that provide pedestrian passage through blocks running from STREET to STREET or interior block parking area. The easement width for these pathways shall not be less than 20 feet and the paved walkway not less than 10 feet, except where specifically noted on the REGULATING PLAN, and should provide an unobstructed view through their length.

PUBLIC SPACE

Property (STREETS, ALLEYS, CIVIC GREENS, SQUARES and parks) within the public domain within which citizens may exercise their rights.

REGULATING PLAN

The REGULATING PLAN is the coding key for the BART Station Property BUILDING ENVELOPE STANDARDS that provide specific information for the disposition of each building site. The REGULATING PLAN also shows how each site relates to adjacent public spaces, the overall BART Station Property and the surrounding

environment. For lots in special locations, there may be additional design guidelines identified in the REGULATING PLAN.

RESIDENTIAL FLAT

RESIDENTIAL FLATS are building types are specifically defined in the BUILDING ENVELOPE STANDARD for RESIDENTIAL FLAT SITES. They allow both *Condominium* and *Apartment* arrangements (as defined by the County Zoning Ordinance).

REQUIRED BUILDING LINE (RBL)

The building must be *built-to* (coincident with) the REQUIRED BUILDING LINE (RBL) The RBL is a requirement, not a permissive minimum as is a set-back. The RBL for each lot is shown on the REGULATING PLAN.

SHOPFRONT BUILDING

SHOPFRONT BUILDINGS are building types spatially defined in the BUILDING ENVELOPE STANDARD for SHOPFRONT BUILDINGS sites.

SQUARE , CIVIC GREEN

PUBLIC SPACES located within the BART Station Property, as designated on the Masterplan. The SQUARE is generally paved, appropriate to a more highly trafficked area. The CIVIC GREEN is a primarily unpaved, formally configured, small public lawn or park. Situated at prominent locations within the BART STATION PROPERTY and often dedicated to important events or citizens, CIVIC GREENS and SQUARES shall not include active recreation structures such as ball fields and courts.

STREET, STREET FRONTAGE

1. STREET includes all PUBLIC SPACE (STREETS, SQUARES, PEDESTRIAN PATHWAYS, GREENS, parks), including the BART passenger platform -- but not: the BART line itself (or underneath), Block interior (parking structure) driveways or ALLEYS.
2. STREET FRONTAGE refers to the building line coincident with the STREET Right of Way (ROW) or the RBL.

STREET TREE

A deciduous canopy shade tree as listed in the STREET TREE list on the REGULATING PLAN. STREET TREES are of a proven hardy and drought tolerant species, large enough to form a canopy with sufficient clear trunk to allow traffic to pass under unimpeded.

STREET TREE ALIGNMENT LINE

A generally straight line that STREET TREES are to be planted along. This alignment is parallel with the STREET or SQUARE and unless otherwise specified in the REGULATING PLAN is set four (4) feet from the back of the curb.

STREET WALL

A masonry wall, between 6 and 15 feet in height, built on the RBL or building line.

STOOP
An entry platform on the STREET FRONTAGE of a building. STOOPS may be roofed but they shall not be enclosed except by required safety railings or balustrades.

TOWN ARCHITECT
The TOWN ARCHITECT is an area locally based Urban Designer, familiar with New Urbanist principles and with the Pleasant Hill BART Station Property redevelopment, who will work with prospective tenants to show how the BART Station Property can satisfy their site needs in a cost efficient manner. The TOWN ARCHITECT will work under the direction of the County and will assist the developer, tenants, BART, and the County in achieving the goals of these Codes in a cost effective manner. The TOWN ARCHITECT will make recommendations to the Community Development Department prior to and including consideration of Final Development Plans or modifications and to the Zoning Administrator prior to issuance of building permits.

TOWNHOUSE
Note: this definition differs from the definition in the County Zoning Ordinance. A residential, common-wall building type between 18 and 36 feet wide and 2 to 4 storeys. TOWNHOUSES are one family dwellings in which each has its own front or rear access to the outside, **each unit is two stories or more in height, units may be stacked one over another**, and each unit is separated from any other unit by one or more common and fire resistant walls. TOWNHOUSES shall be owned either fee-simple or as condominiums. All lower units in Townhouse buildings shall have entry off the STREET from a STOOP as per the building envelope standard.

"WHERE CLEARLY VISIBLE FROM THE STREET"
Many requirements of this Code apply only where the subject is "clearly visible from the STREET." Note that the definition of STREET includes SQUARES, parks, the BART platform, and all PUBLIC SPACE except: ALLEYS or the BART rail line and the area underneath. The intent here is to restrict control to things within the public realm where there is public significance and limit interference in the private realm.

WORKPLACE BUILDING
WORKPLACE BUILDINGS are building types spatially defined in the BUILDING ENVELOPE STANDARD for WORKPLACE building sites.

THE
REGULATING PLAN

UNDERSTANDING THE REGULATING PLAN

As the principal tool for implementing the Pleasant Hill BART Station Property Codes, the REGULATING PLAN identifies the basic physical characteristics of each building site and the BUILDING ENVELOPE STANDARD (BES) assigned to it.

The illustration below explains the elements of the REGULATING PLAN and serves as a reference when examining the PLAN.

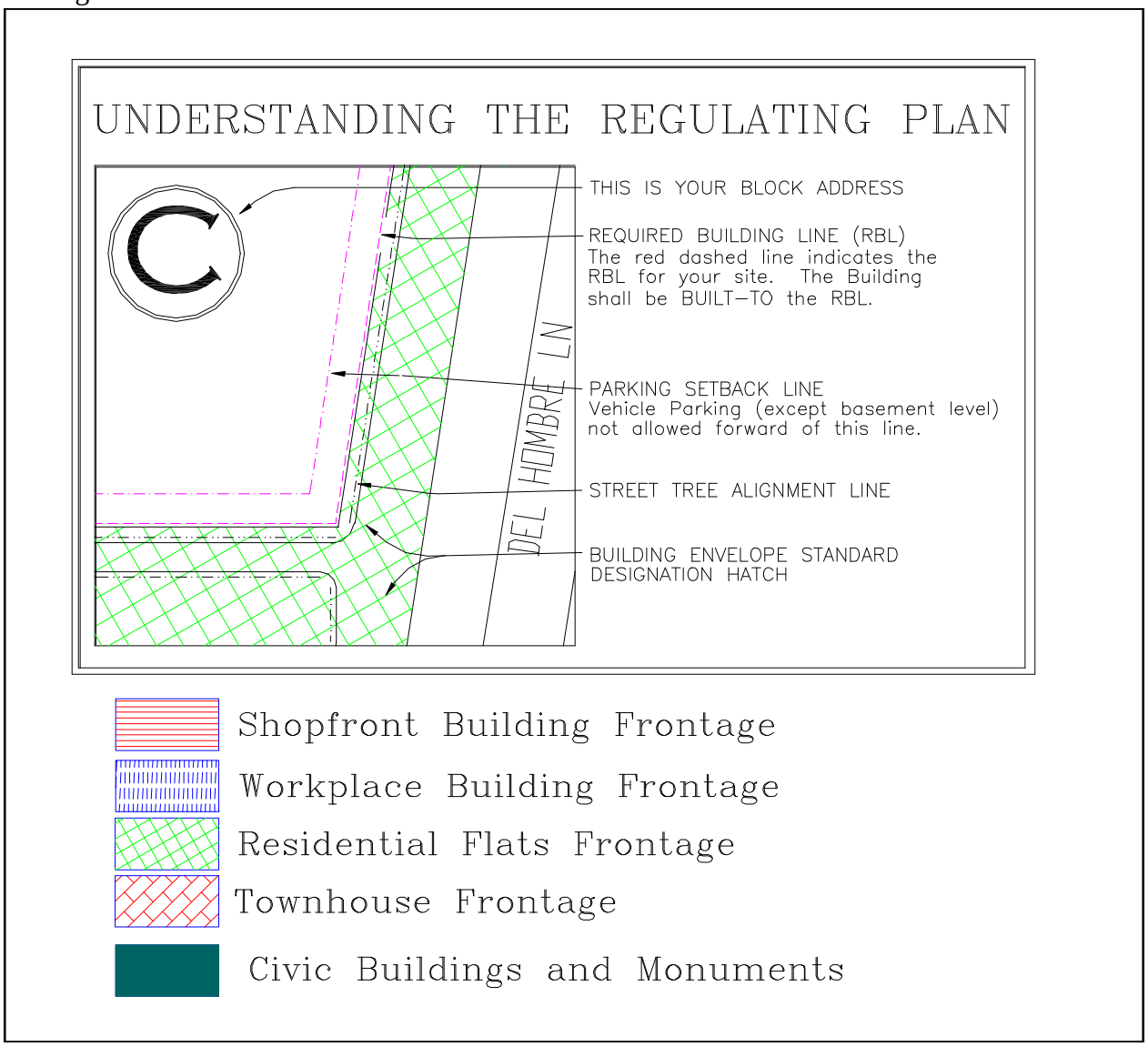

BUILDING SITES ARE CODED BY THEIR STREET FRONTAGE

When the Code designation changes at a STREET corner, for example -- the greater hierarchy BUILDING ENVELOPE STANDARD type may be applied for a maximum distance of 50 feet down the lesser street. The hierarchy, in descending order is: SHOPFRONT, WORKPLACE, RESIDENTIAL FLAT, TOWNHOUSE.

THE BUILDING ENVELOPE STANDARDS

INTRODUCTION

The BART Station Property REGULATING PLAN identifies the BUILDING ENVELOPE STANDARDS for all building sites. The goal of the BUILDING ENVELOPE STANDARDS is the creation of good STREET space. They aim for the minimum level of control necessary to meet that goal. Deviations to the BUILDING ENVELOPE STANDARDS can be granted only where the unique physical circumstance of a lot makes compliance impossible (and the specific deviation must nevertheless satisfy the intent of the STANDARD).

The BUILDING ENVELOPE STANDARDS set the basic parameters governing building construction, including the building envelope (in three dimensions) and certain required/permitted elements, such as BALCONIES, and STREET WALLS. The STANDARDS specify building types that will be built within the BART Station Property.

GENERAL PRINCIPLES

1. BUILDINGS ARE ALIGNED AND CLOSE TO THE STREET.
   Buildings form the space of the STREET.

3. BUILDINGS OVERSEE THE STREET AND SQUARE WITH ACTIVE FRONTS AND BALCONIES.
   This overview of the STREET contributes to vital and safe public space

4. PROPERTY LINES ARE PHYSICALLY DEFINED BY BUILDINGS OR STREET WALLS.
   Land should be clearly *public* or *private*—in public view and under surveillance or private and protected.

5. VEHICLE STORAGE, GARBAGE AND MECHANICAL EQUIPMENT ARE KEPT AWAY FROM THE STREET.

BUILDING ENVELOPE STANDARD

for

Workplace Building Sites

Pleasant Hill BART Station

Building Envelope Standards

Workplace Building Sites

Height

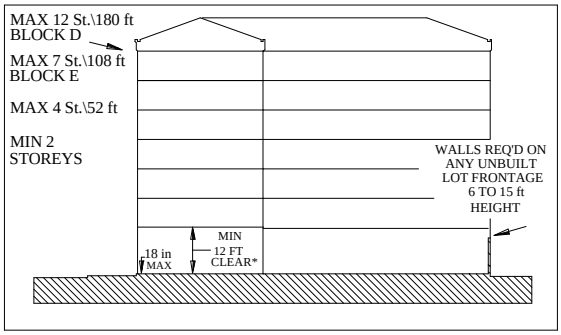

The building shall be between 2 and 4 Storeys in height, except where otherwise noted here or on the REGULATING PLAN. Any parking structure w/in the block shall not exceed the eave height of any building w/in 75 feet.

Any unbuilt RBL or COMMON LOT LINE shall have a STREET WALL built along it between 6 feet and 15 feet in height.

The ground floor elevation shall be no more than 18 inches above the fronting sidewalk elevation.

No less than 80% of the ground floor shall have at least 12 feet clear height.

Siting

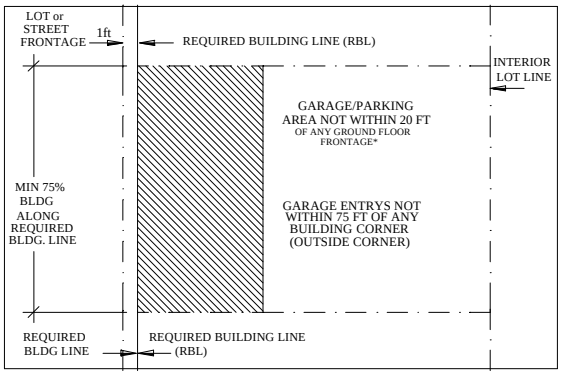

The STREET facade shall be *Built-To* the REQUIRED BUILDING LINE (RBL) within 75 feet of any BUILDING CORNER, and *Built-To* not less than 75% of the RBL overall. There are no required side setbacks.

Any unbuilt RBL shall have a STREET WALL along it, between 6 feet and 15 feet in height.

*Parking for vehicles (autos, trailers, boats, etc.) shall be at least 20 feet from any STREET FRONTAGE (except for basement garages). Garage/parking entrances shall be no closer than 75 feet from any BUILDING CORNER (except where otherwise designated on the REGULATING PLAN).

Elements

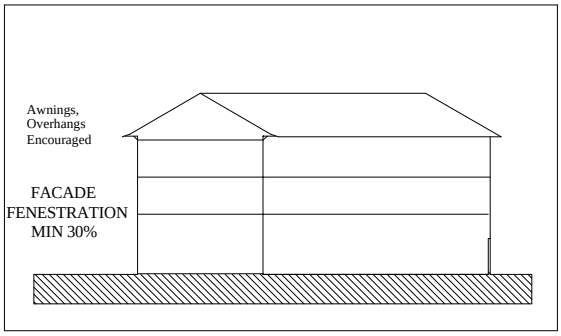

FENESTRATION shall be no less than 30% for all RBL building facades (measured for each facade and storey between 3 and 9 feet above the finshed floor). Blank lengths of wall greater than 20 linear feet are prohibited.

Uses

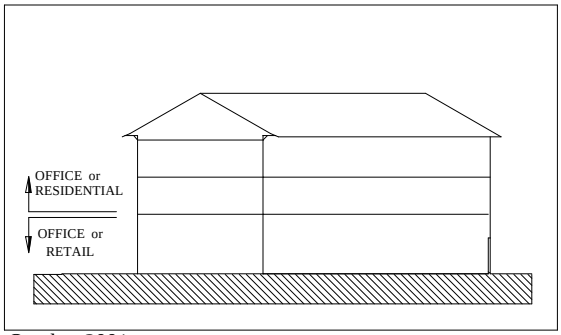

The ground floor shall be only non-residential uses such as Office and Retail.

Upper floor uses may be either office or residential (including hlodging operations).

Functioning entry door(s) shall be along the RBL facade of the building facing Block E.

The garage, parking for vehicles (autos, trailers, boats, etc.) shall be at least 20 feet from any STREET FRONTAGE (except for basement garages). *Except where otherwise designated on the REGULATING.

October 2001

© 2001 GEOFFREY FERRELL ASSOCIATES LLC. All Rights Reserved.

SPECIFICATIONS: WORKPLACE BUILDING SITES

HEIGHT SPECIFICATIONS:

1. Principal building height is measured in storeys with maximum heights in feet. These maximums preserve view corridors and are shown on the REGULATING PLAN.
2. The maximum height limit in feet is measured from the highest fronting grade to the mid point of the roof.
3. STREET WALL heights are relative to the adjacent sidewalk or ground elevation when not fronting a sidewalk.

SITING SPECIFICATIONS:

1. The buildings shall occupy only the specified (hatched) area of the lot. No part of the buildings (excepting overhanging eaves, BALCONIES, STOOPS, and small and unroofed garden structures) shall occupy the remaining lot area.
2. Corner Lots: The STREET FRONTAGE for corner lots is both the front and side STREETS (or RBLS).

ELEMENTS SPECIFICATIONS:

1. The building's STREET façade should be composed as a simple plane (limited jogs of less than 18" are considered within this requirement) interrupted only by windows, STOOPS, BALCONIES, and storefronts.
2. Designated GARAGE ENTRIES shall be the sole means of automobile access, unless otherwise approved by the County.
3. Parking for vehicles or Garage doors shall not face, and parking areas (unenclosed) shall not be located within 20 feet of the STREET, unless otherwise designated on the REGULATING PLAN. These prohibitions are not applicable to on street parallel parking.

BUILDING ENVELOPE STANDARD

for

SHOPFRONT BUILDING SITES

Pleasant Hill BART Station

Building Envelope Standards

Shopfront Building Sites

Height

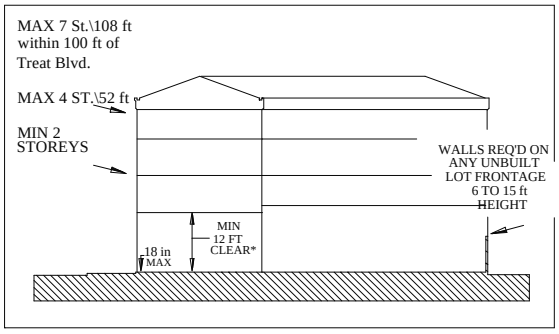

The building shall be between 2 and 4 Storeys to in height, except where otherwise noted here or on the REGULATING PLAN. Any parking structure w/in the block shall not exceed the eave height of any building w/in 75 feet.

Any unbuilt RBL or COMMON LOT LINE shall have a STREET WALL built along it, between 6 feet and 15 feet in height.

The ground floor elevation shall be no more than 18 inches above the fronting sidewalk elevation.

No less than 80% of the ground floor shall have at least 12 feet clear height. No less than 80% of the upper storeys shall each have at least 8 feet 8 inches clear height.

Siting

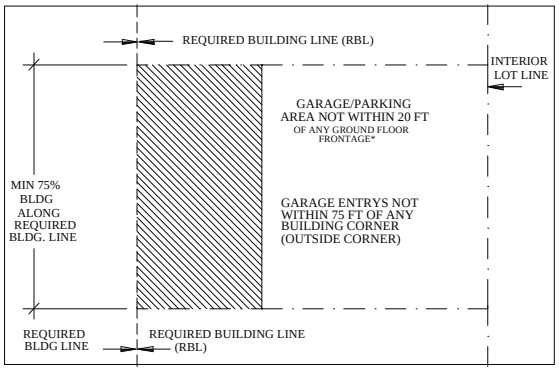

The STREET facade shall be *Built-To* the REQUIRED BUILDING LINE (RBL) within 75 feet of any BUILDING CORNER, and *Built-To* not less than 75% of the RBL overall. There are no required side setbacks.

Any unbuilt STREET FRONTAGE shall have a STREET WALL along it, between 6 feet and 15 feet in height.

Parking for vehicles (autos, trailers, boats, etc.) shall be at least 20 feet from any STREET FRONTAGE (excepting basement garages). Garage/parking entrances shall be no closer than 75 feet from any BUILDING CORNER (except where otherwise designated on the REGULATING PLAN).

Elements

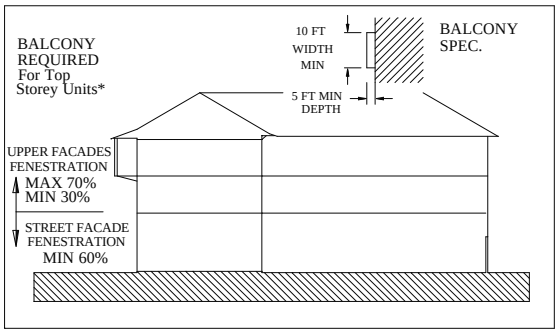

The primary ground floor facade shall have no less than 60% F ENESTRATION (measured between 2 and 10 feet above the fronting sidewalk). Awnings and overhangs are encouraged.

Upper storey facades shall have between 30% and 70% FENESTRATION (measured for each storey between 3 and 9 feet above the finshed floor).

*Except facades along Treat Blvd. and Jones Rd., no less than 50% of the top storey units shall have BALCONIES.

ARCADES are permitted if designed and constructed in contiguous STREET FRONTAGES of at least 200 feet (or any complete RBL fronting the square). Consult the Masterplan.

Uses

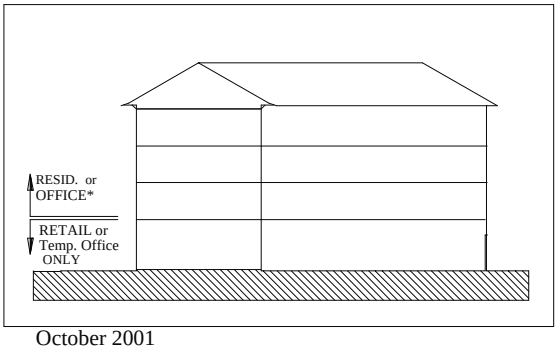

The ground floor shall house only retail or temporary office uses (also lobby and access for upper storey uses).

*Upper storey uses may be either: (Block B) residential, or (Block A and C), residential, office or lodging.

Fronting the square and the North/South Retail Street (between Blocks A and B) there shall be functioning entry door(s) along the STREET facade at intervals not greater than 75 feet.

The garage (parking for vehicles autos, trailers, boats, etc.) shall be at least 20 feet from any STREET FRONTAGE (except for basement garages). Except where otherwise designated on the REGULATING PLAN.

October 2001

© 2001 GEOFFREY FERRELL ASSOCIATES LLC All Rights Reserved

SPECIFICATIONS: SHOPFRONT BUILDING SITES

HEIGHT SPECIFICATIONS:

1. Principal building height is measured in storeys with maximum heights in feet. These maximums preserve view corridors and also are shown on the REGULATING PLAN.
2. The maximum height limit in feet is measured from the highest fronting grade to the mid point of the roof.

STREET WALL heights are relative to the adjacent sidewalk or ground elevation when not fronting a sidewalk.

SITING SPECIFICATIONS:

1. The buildings shall occupy only the specified (hatched) area of the lot. No part of the buildings (excepting overhanging eaves, BALCONIES, STOOPS, and small and unroofed garden structures) shall occupy the remaining lot area.
2. Corner Lots: The STREET FRONTAGE for CORNER LOTS is both the front and side-STREETS (or RBLS).

ELEMENTS SPECIFICATIONS:

1. The building's STREET façade should be composed as a simple plane (limited jogs of less than 18" are considered within this requirement) interrupted only by windows, STOOPS, BALCONIES, and storefronts.
2. Designated GARAGE ENTRYS shall be the sole means of automobile access, unless otherwise approved by the County.
3. Parking for vehicles or Garage doors shall not face, and parking areas (unenclosed) shall not be located within 20 feet of the street. These prohibitions are not applicable to on-street parallel parking.

BUILDING ENVELOPE STANDARD

for

RESIDENTIAL FLAT SITES

Pleasant Hill BART Station

Building Envelope Standards

Residential Flats Sites

Height

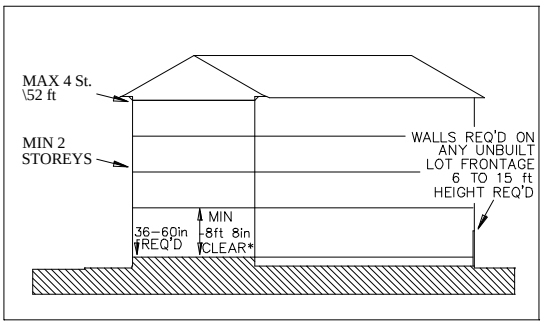

The building shall be between 2 and 4 Storeys in height, except where otherwise noted on the REGULATING PLAN.
Any parking structure w/in the Block shall not exceed the eave height of any building w/in 75 feet.

Any unbuilt REQUIRED BUILDING LINE (RBL) or COMMON LOT LINE shall have a STREET WALL built along it, between 6 feet and 15 feet in height.

The ground storey finished floor elevation of any *residential unit* shall be no less than 36 inches above the fronting sidewalk.

The first storey shall have at least 8 feet 8 inches in clear height.

Siting

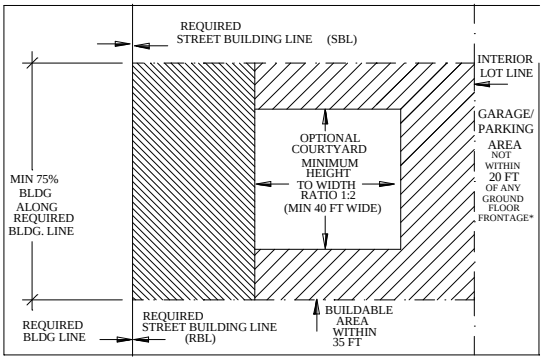

The STREET facade shall be *Built-To* the REQUIRED BUILDING LINE (RBL) within 75 feet of any BUILDING CORNER, and not less than 75% of the RBL overall. There are no required side setbacks.

Any unbuilt RBL or COMMON LOT LINE shall have a STREET WALL along it, between 6 feet and 15 feet in height.

The garage, parking for vehicles (autos, trailers, boats, etc.) shall be at least 20 feet from any RBL (except for basement garages).

*Except where otherwise designated on the REGULATING PLAN.

Parking access shall be from a designated GARAGE ENTRY.

**For special TOWNHOUSE configurations the facade shall be 5 feet back from the RBL, see Specifications, next page.

Elements

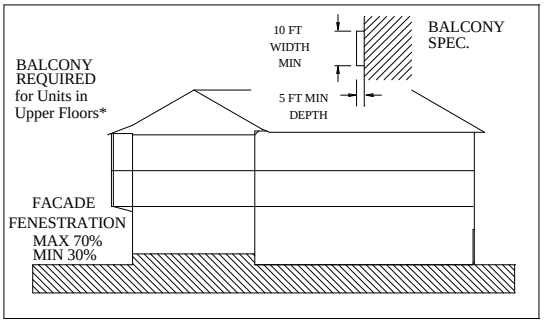

*A roofed BALCONY is required for at least 50% of the upper storey units of the building fronting a STREET or RBL, minimum 5 feet deep and 10 feet wide. (Except where the RBL is within 5 feet of a city or county owned ROW.)

FENESTRATION shall be between 30% and 70% for all RBL building facades (measured for each facade and storey between 3 and 9 feet above the finshed floor). Blank lengths of wall greater than 20 linear feet are prohibited.

Uses

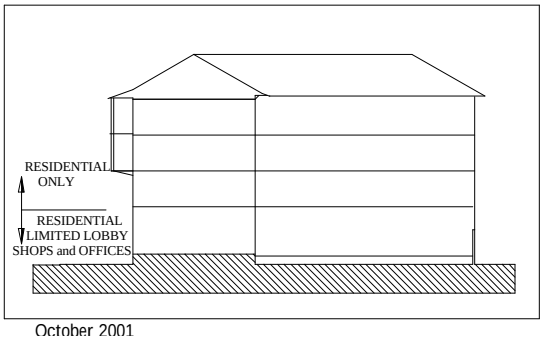

Upper storeys shall be exclusively for residential use.

The ground floor may, in addition to residential uses, have small professional office, building lobby, building manager's office, ancillary retail grocery, and cafe uses (each less than 1,000 sq ft).

The garage, parking for vehicles (autos, trailers, boats, etc.) shall be at least 20 feet from any RBL (except for basement garages).

October 2001

© 2001 GEOFFREY FERRELL ASSOCIATES LLC All Rights Reserved

SPECIFICATIONS: RESIDENTIAL FLATS

HEIGHT SPECIFICATIONS:

1. Principal building height is measured in storeys with maximum heights in feet. These maximums preserve view corridors and also are shown on the REGULATING PLAN.
2. The maximum height limit in feet is measured from the highest fronting grade to the mid point of the roof.
3. STREET WALL heights are relative to the adjacent sidewalk or ground elevation when not fronting a sidewalk.

SITING SPECIFICATIONS:

1. The buildings shall occupy only the specified (hatched) area. No part of the buildings (excepting overhanging eaves, BALCONIES, and STOOPS) shall occupy the remaining lot area.
2. Corner Lots: The STREET FRONTAGE for CORNER LOTS is both the front and side STREETS (or RBLS).
3. TOWNHOUSE building types may be built on RESIDENTIAL FLATS Sites.

ELEMENTS SPECIFICATIONS:

1. The building's STREET façade should be composed as a simple plane (limited jogs of less than 18" are considered within this requirement) interrupted only by windows, STOOPS, BALCONIES, and storefronts.
2. Designated GARAGE ENTRIES shall be the sole means of automobile access, unless otherwise approved by the County.
3. Parking for vehicles or Garage doors shall not face, and parking areas (unenclosed) shall not be located within 20 feet of the STREET. These prohibitions are not applicable to on street parallel parking.

BUILDING ENVELOPE STANDARD

for

TOWNHOUSE SITES

Pleasant Hill BART Station

Building Envelope Standards

Townhouse Sites

Height

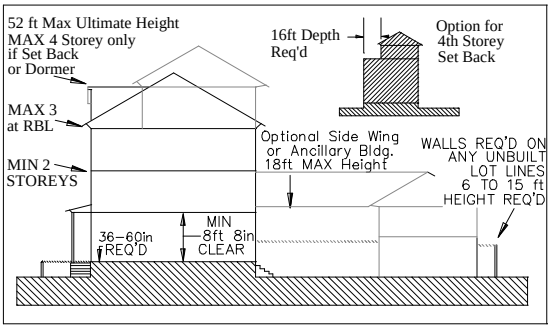

The building shall be between 2 and 4 Storeys in height. The 4th storey shall be either set 16 ft back from the RBL or built as an attic storey with DORMERS.

The first storey finished floor elevation of any residential unit shall be between 36 and 60 inches above the fronting sidewalk. The first 3 storeys shall have at least 8 feet 8 inches in clear height.

Any unbuilt REQUIRED BUILDING LINE (RBL) shall have a STREET WALL built along it and any unbuilt rear or COMMON LOT LINE shall have a fence along it, both between 6 ft and 15 ft in height.

Siting

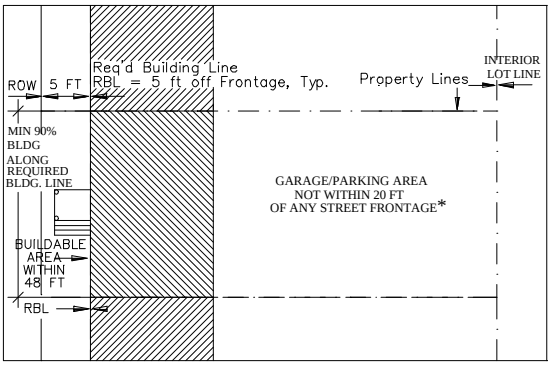

The STREET FACADE shall be *Built-To* the REQUIRED BUILDING LINE (RBL) within 75 ft of any BUILDING CORNER, and not less than 90% of the RBL overall. There are no required side setbacks.

Any unbuilt RBL shall have a STREET WALL along it, between 6 feet and 15 ft in height.

The garage, parking for vehicles (autos, trailers, boats, etc.) shall be at least 20 ft from any RBL (excepting basement garages). Parking access shall be from a designated GARAGE ENTRY.

The lot/unit width shall be between 18 ft and 36 ft. A maximum of 6 units shall be contiguous as a single building. There shall be a 10 ft gap (gated)between multiple TOWNHOUSE buildings.

*Except where otherwise designated on the REGULATING PLAN.

Elements

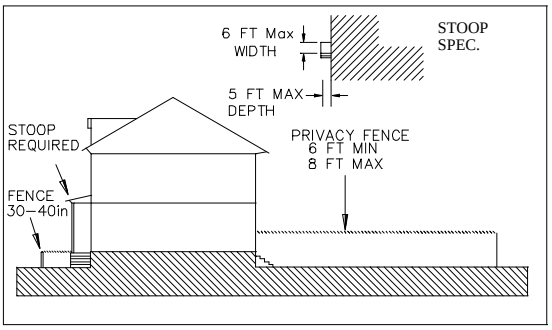

A STOOP, not more than 5 ft deep and 6 ft wide (plus steps) is required forward of the REQUIRED BUILDING LINE (RBL). (Excluding upper units where one unit is stacked above another.)

A fence, 30 to 40 inches in height, is permitted along the STREET FRONTAGE and along the COMMON LOT LINES of the front yard. Privacy fencing, between 6 and 8 ft in height, shall be placed along any unbuilt rear and COMMON LOT LINES.
FENESTRATION shall be between 30% and 70% for all RBL building facades (measured for each facade and storey between 3 and 8 feet above the finshed floor). Blank lengths of wall greater than 20 linear feet are prohibited.

Uses

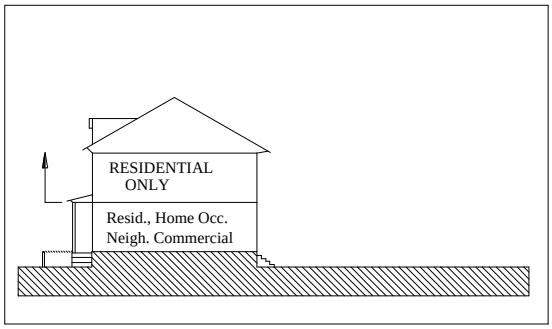

Upper storeys shall be exclusively for residential use.

The ground floor may, in addition to residential uses, have small professional office, building lobby, building manager's office, ancillary retail grocery, and cafe uses (each less than 1,000 sq ft).

The garage, parking for vehicles (autos, trailers, boats, etc.) shall be at least 20 feet from any RBL (excepting basement garages).

*Except where otherwise designated on the REGULATING PLAN.

October, 2001

© 2001 GEOFFREY FERRELL ASSOCIATES LLC All Rights Reserved

SPECIFICATIONS: TOWNHOUSES

HEIGHT SPECIFICATIONS:

1. Principal building height is measured in storeys with maximum heights in feet. These maximums preserve view corridors and also are shown on the REGULATING PLAN.
2. The maximum height limit in feet is measured from the highest fronting grade to the mid point of the roof.
3. STREET WALL heights are relative to the adjacent sidewalk or ground elevation when not fronting a sidewalk.

SITING SPECIFICATIONS:

1. The buildings shall occupy only the specified (hatched) area. No part of the buildings (excepting overhanging eaves, BALCONIES, and STOOPS) shall occupy the remaining lot area.
2. Corner Lots: The STREET FRONTAGE for CORNER LOTS is both the front and side STREETS (or RBLS).
3. Townhouse building types may be built on Urban Apartment House Sites. .

ELEMENTS SPECIFICATIONS:

1. The building's STREET façade should be composed as a simple plane (limited jogs of less than 18" are considered within this requirement) interrupted only by windows, STOOPS, BALCONIES, and storefronts.
2. Designated GARAGE ENTIES shall be the sole means of automobile access, unless otherwise approved by the County.
3. Parking for vehicles or Garage doors shall not face, and parking areas (unenclosed) shall not be located within 20 feet of the STREET. These prohibitions are not applicable to on-street parallel parking.

The Pleasant Hill BART Station Property Code, which includes the Regulating Plan and the Building Envelope Standards, has been prepared for use in the Pleasant Hill BART Station Property. All copyrights and publishing rights are exclusively reserved by Geoffrey Ferrell Associates. The Contra Costa County Redevelopment Agency, BART, the Developers and Builders and Realtors, etceteras, and Lennertz Coyle and Associates L.L.C. are granted full use of this manual for the permitting, regulation, development, management and promotion of the Pleasant Hill BART Station Property, including copying and distribution to interested parties upon their request as a matter of public record.

All reproductions and publications of this manual, in whole or in part, shall carry the following credit: "**Geoffrey Ferrell Associates, Washington, D.C**." This manual may not be otherwise photocopied, in whole or in part, without the expressed written permission of Geoffrey Ferrell Associates, and may not be used for any other purposes whatsoever.

The Pleasant Hill BART Station Property Code is binding on all parties having an interest in any portion of the Property, and each owner is required to comply with the requirements set forth herein.

GEOFFREY FERRELL ASSOCIATES L.L.C.
19 14th Street S.E. Washington D.C. 20003 telephone (202) 547-7141 facsimile 547-7151
GEOFFFERRELL@STARPOWER.NET WWW.GEOFFREYFERRELL.COM

THE NEW

PLEASANT HILL BART STATION PROPERTY CODE

ARCHITECTURAL STANDARDS

LENNERTZ COYLE AND ASSOCIATES, L.L.C., MASTER PLAN
GEOFFREY FERRELL ASSOCIATES, L.L.C., CODE WRITER

GEOFFREY FERRELL ASSOCIATES FINAL DRAFT

TABLE OF CONTENTS

I. GENERAL PRINCIPLES AND INTENT 3

II. ARCHITECTURAL STANDARDS 6
- A. BUILDING WALLS 7
- B. ROOFS 9
- C. WINDOWS AND DOORS 11
- D. STREET WALLS 13
- E. LIGHTING AND MECHANICAL EQUIPMENT 15
- F. COLORS 16

III. LANDSCAPE STANDARDS 18

IV. DEVELOPMENT REVIEW PROCEDURE 20

GENERAL PRINCIPLES AND INTENT

1. TRADITION

- These standards favor an aesthetic that is traditional in a broad sense. They specify an architectural language of load-bearing walls, pitched roofs, and regional materials reminiscent of northern California's Spanish Colonial Revival structures. The standards also coincide with the Code requirements that specify certain details, such as column spacing, window proportions, roof pitches, and overhangs.
- The intention behind these standards is not to copy the past, but to utilize its discipline when designing new buildings. Structures created according to these standards will also demonstrate a clear relationship to the longstanding architectural traditions of northern California.
- Buildings designed to withstand the elements (gravity, sun, weather, and time) that also incorporate traditional rules of proportion and massing retain their appeal beyond a simple question of "style."
- All building materials shall express their specific properties. For example, heavier more permanent materials (i.e. masonry) support lighter materials (i.e. wood).

2. SIMPLICITY

- The building mass shall consist of a simple composition of basic building forms that follow a clear hierarchy. For example, the principal structure and accessory buildings will be sited in a manner appropriate to their size and function.
- Rooflines shall be simple, utilizing gables, hips, and sheds, or combinations of these basic forms. Complicated rooflines are to be avoided.
- Details such as doors, windows, eaves, railings, etc. should be carefully designed and constructed. These will contribute significantly a building's visual interest and value.

3. EQUIVALENT OR BETTER

- While only materials, techniques, and product types prescribed here are allowed, equivalent or better practices and products are encouraged. Their introduction shall be submitted to the TOWN ARCHITECT for review and approval.

4. WHERE CLEARLY VISIBLE FROM THE STREET

- Many of these standards apply only in conditions WHERE CLEARLY VISIBLE FROM THE STREET. Note that the definition of STREET includes, PARKS, SQUARES, the BART passenger platform, and all public areas but not the BART LINE. These controls therefore concentrate on the public realm and minimize interference in the private realm. For example, an architectural element that is visible only through an opening in a STREET WALL is not CLEARLY VISIBLE FROM THE STREET.

ARCHITECTURAL INTENT

FOR THE

PLEASANT HILL BART STATION PROPERTY REDEVELOPMENT

Image by Steve Price, Urban Advantage

SHOPFRONT and WORKPLACE buildings are common in every American downtown. These building types are designed to foster active street life. Their ground floor fronts have large windows to encourage a connection between the commercial activity within and the public life of street and sidewalk. Since upper-storey uses may be offices or residences, those windows are appropriately smaller.

LCA Architects/ Seth Harry

Other large buildings utilize the same basic components as SHOPFRONT and WORKPLACE buildings as shown in the illustration to the left.

ARCHITECTURAL INTENT

FOR THE

PLEASANT HILL BART STATION PROPERTY REDEVELOPMENT

The architectural aesthetic shall pursue the following characteristics:

1. Steeply pitched gable and hip roofs
2. Overhanging eaves and balconies with heavy timber-supporting brackets and/or rafter tails
3. Simple building walls of stucco, stone, or brick
4. Muted exterior colors with rich trim and detail colors

These illustrations show typical views that exemplify the desired aesthetic.

Buildings must undergo a process of careful review with the TOWN ARCHITECT to ensure a building that makes both economic and architectural sense for the BART Station Property. The TOWN ARCHITECT will also work with the developer and/or designer to show them how the BART Station Property will satisfy their site needs and other requirements.

The TOWN ARCHITECT will make recommendations to the Community Development Department prior to consideration of Final Development Plans or modifications. The TOWN ARCHITECT will also consult with the zoning administrator before the issuance of building permits.

THE ARCHITECTURAL STANDARDS

INTENT: BUILDING WALLS (EXTERIOR)

INTENT AND GUIDING ILLUSTRATIONS

The illustrations and statements on this page are advisory only. Refer to the Code Standards at right for the specific prescriptions of this section.

Building walls should reflect the traditional materials and techniques of California's Spanish Colonial Revival architecture. They should express the construction techniques and structural constraints of traditional, long-lasting materials. Simple configurations and solid craftsmanship are favored over complexity and ostentation in building form.

STANDARDS: BUILDING WALLS (EXTERIOR)

WHERE CLEARLY VISIBLE FROM THE STREET

MATERIALS - BUILDING WALLS

- Brick
- Stucco (cementitious finish)
- Native stone
- Precast masonry
- Gypsum Reinforced Fiber Concrete (GFRC -- for trim elements only)

CONFIGURATIONS AND TECHNIQUES

- *Walls*
  - Wall openings shall be "no more squat than square" (i.e. must be taller than wide).
  - Wall openings shall not span vertically more than one storey.
  - Wall materials shall be consistent horizontally (i.e. joints between different materials must be horizontal and continue around corners) except for towers, chimneys and piers.

- *Brick, Block and Stone*
  - Must be properly detailed and in appropriate load-bearing proportions.

- *Stucco (cementitious finish)*
  - Smooth or sand finish only

INTENT: ROOFS

INTENT AND GUIDING ILLUSTRATIONS

The illustrations and statements on this page are advisory only. Refer to the Code Standards at right for the specific prescriptions of this section.

No other architectural element so directly expresses the relationship between a building and the forces of nature and time. Roofs should have consistent pitches and generous overhangs in order to provide visual coherence to the BART Station Property. Roofs shall also demonstrate a common-sense recognition of the climate by utilizing appropriate pitch, drainage, and materials.

STANDARDS: ROOFS

WHERE CLEARLY VISIBLE FROM THE STREET

Materials

- Clay or concrete (faux clay)
- Tile: barrel or flat roman
- Slate, equivalent synthetic or better

CONFIGURATIONS AND TECHNIQUES

- Pitch
  - Simple hip and gable roofs shall be symmetrically pitched between 6:12 and 10:12.
  - Shed roofs, subordinate and attached to the primary structure, shall be pitched between 4:12 and 7:12.

- Overhang
  - Eaves must overhang at least 30" on the primary structure.
  - Rakes (gable end) must overhang at least 24."
  - Eaves and rakes on accessory buildings, dormers, and other smaller structures must overhang at least 8."
  - Open eaves and simple classical soffits and fascia are allowed.
  - Soffits shall be placed perpendicular to the building wall, not sloping in plane with the roof (except for gable end rakes).
  - Cornices and soffits may be a combination of vinyl, wood, and/or metal.
  - Timber eaves and BALCONY brackets must be a minimum of 5.5" in dimension.

- Cornices and Other Features
  - Overly elaborate, "postmodern" and/or "high-tech" designs are not allowed. Consult the TOWN ARCHITECT for appropriate configurations.
  - Skylights and roof vents are permitted only on the roof plane opposite the primary STREET or RBL.

- Buildings seven (7) storeys and above may vary from the exact prescriptions of these standards as long as this is not perceptible from the STREET. Specific roof and cornice features permitted include:
  - So-called "mansard" roofs: flat roof platform behind partial roof slope
  - Alternate imitation clay tile materials, such as fiberglass

- Parking structures that front the STREET or RBL may satisfy the overhang requirement with a cornice with a projection beyond the structure walls that is not less than 10" total.

INTENT: WINDOWS AND DOORS

INTENT AND GUIDING ILLUSTRATIONS

The illustrations and statements on this page are advisory only. Refer to the Code Standards at right for the specific prescriptions of this section.

Windows and doors should be simple in both design and placement. Windows should be divided by mullions into multiple panes of glass.. This helps the window “hold” the surface of the façade, rather than appearing like a “hole” in the wall, an effect that is produced by a single sheet of glass.

STANDARDS: WINDOWS AND DOORS

WHERE CLEARLY VISIBLE FROM THE STREET

MATERIALS

- Windows of anodized aluminum, wood, clad wood, vinyl, or steel
- Window glass must be clear, with light transmission at the ground storey at least 90% and 75% for the upper storeys (subject to modification if necessary to meet Title 24 requirements)
- Specialty windows may utilize stained or opalescent glass
- Window screens shall be black or gray
- Screen frames shall match window frame material or dark anodized
- Doors of wood, clad wood, or steel (dark bronze)

CONFIGURATIONS AND TECHNIQUES

- For all windows:
  - Openings for windows, windowpanes, and doors shall be "no more squat than square" (i.e. must be taller than wide). Transom windows are not included in the measurements of this requirement.
  - Windows may be ganged horizontally (maximum 3 per group) if subdivided by a mullion that is at least 7” wide.
  - Windows shall be no closer than 30” to building corners.
  - Exterior shutters shall be sized and mounted appropriately for the window (1/2 the width), even if inoperable.

- Upper-storey windows:
  - Double-hung, single-hung, awning, and casement windows.
  - Minimum 2-over-1 double-hung, single-hung sash configurations.
  - For residential buildings: panes of glass no larger than 36” vertical by 20” horizontal (except for the bottom sash in a 2-over-1 configuration).
  - The maximum pane size for office uses is 60” vertical by 48” horizontal.
  - Egress windows may be installed according to the Uniform Building Code (UBC).

- Shopfront (ground floor) windows and doors:
  - Single panes of glass not larger than 6’ height by 4’ width
  - Ground floor windows shall not be made opaque by window treatments (excepting operable sunscreen devices within the conditioned space), and shall allow a minimum 60% of surface view into the building (to at least a 20’ depth)

- Doors:
  - Double-height entryways are not allowed.
  - Shopfronts may extend up to 12” beyond the building façade toward the STREET.
  - Doors shall not be recessed more than 3’ behind the shopfront windows and, in any case, shall have a clear view to a 45-degree angle past the perpendicular from each side of the door.

INTENT: STREET WALLS

INTENT AND GUIDING ILLUSTRATIONS

The illustrations and statements on this page are advisory only. Refer to the Code Standards at right for the specific prescriptions of this section.

STREET WALLS establish clear edges where buildings do not. The BART Station Property includes a series of masonry walls that define outdoor spaces and separate the public realm (street and sidewalk) from the private realm (gardens, trash cans, and equipment).

STANDARDS: STREET WALLS

WHERE CLEARLY VISIBLE FROM THE STREET

MATERIALS

- Native stone (carved with local and traditional techniques) and equivalent imitation stone
- Metal – wrought iron, welded steel and/or aluminum (black) for gates only)
- Brick
- Stucco on concrete block (or poured) only with brick or stone coping
- A combination of materials; i.e. stone piers with brick infill panels

CONFIGURATIONS AND TECHNIQUES

- STREET WALLS along any unbuilt STREET FRONTAGE shall be between 6' and 15' above the adjacent ground
- Stucco STREET WALLS shall have a hardy species of climbing vine planted along them
- Metal work may additionally be treated to imitate a copper patina

All STREET WALL facades shall be as carefully designed as the building façade, with the finished side out, i.e. the "better" side facing the STREET.

STANDARDS: LIGHTING AND MECHANICAL EQUIPMENT

INTENT Materials and equipment chosen for lighting fixtures should be durable, longlasting, and weather well. Appropriate lighting is desirable for nighttime visibility, crime deterrence, and decoration. However, lighting that is too bright or intense creates glare, hinders night vision, and creates light pollution.

STANDARDS

The lighting for the Station Property shall create light necessary for convenience and safety without causing light pollution or glare. Lighting standards will be reevaluated if light pollution becomes evident

- STREET lighting: lights located between 9' and 15' above grade with a maximum average spacing (per block face) of 60' on center and located on STREET TREE ALIGNMENT LINE on each side of the STREET and travel lanes.
- At the front of the building, exterior lights shall be mounted between 6' and 15' above grade.
- Lighting elements shall be incandescent, metal halide, or halogen only. No HID or fluorescent lights (excepting compact fluorescent bulbs, which screw into standard sockets) may be used on the exterior of buildings.
- Floodlights or directional lights (maximum 75-watt bulbs) may be used to illuminate parking garages and working (maintenance) areas, but must be shielded or aimed in such a way that they do not shine into other lots, the STREET, or direct light out of the BART Station Property.
- Floodlighting shall not be used to illuminate building walls (i.e. no up-lighting).
- Lighting of the site shall be of a design and height and shall be located so as to illuminate only the lot. An exterior lighting plan must be approved by the TOWN ARCHITECT.
- No flashing, traveling, animated, or intermittent lighting shall be visible from the exterior of any building whether such lighting is of temporary or long-term duration. Also, the operation of search lights and other upward-directed and moving lights used to promote business activity is strictly prohibited.
- Lighting for parking garages shall satisfy Crime Prevention Through Environmental Design (CPTED) Standards.

MECHANICAL EQUIPMENT

The following shall be placed away from any RBL and be screened from view from the STREET:

- Air compressors, mechanical pumps, exterior water heaters, water softeners, utility and telephone company meters or boxes, garbage cans, storage tanks, and the like may not be stored or located within any area considered a STREET under this Code.

ROOF MOUNTED EQUIPMENT

Roof mounted equipment shall be placed away from the RBL FRONTAGE and be screened from view from the STREET.

INTENT: COLORS

INTENT AND GUIDING ILLUSTRATIONS

The illustrations and statements on this page are advisory only. Refer to the Code Standards at right for the specific prescriptions of this section.

Exterior wall colors should reflect the traditional materials and techniques of California's Spanish Colonial Revival architecture. Just as simple configurations are favored over complexity and ostentation in construction and detailing, they are also necessary in color selection.

COLORS

WHERE CLEARLY VISIBLE FROM THE STREET

MATERIALS

Building Wall Colors

- Colors chosen for the building exteriors should be taken from the Station Property color palette.
- Brick shall approximate the color of bricks made from regional clays
- Primary colors shall not be used for building walls unless they are muted in tone
- Neon colors are not allowed.

Roof Colors

- Natural colors (i.e., terra cotta for clay or ersatz clay) tiles

Trim Colors

- For windows, soffits, cornices, moldings, etc.: whites or dark saturated cool colors (greens, blues), or bronze. Aluminum windows, screen frames, etc. shall be bronze anodized.
- Schemes may have no more than two trim colors.
- Entry doors are permitted a greater color latitude (including reds), subject to TOWN ARCHITECT approval.
- Brick and stone may be left their natural color.

CONFIGURATIONS

- Schemes with building walls of more than one color are discouraged except where materials are different, such as when a decorative stucco door surround is used. Where different wall materials allow two-tone schemes, similar colors and tones are recommended. Sharply contrasting colors shall not be used (e.g., red-green, blue-yellow).

LANDSCAPE STANDARDS AND GUIDELINES

"The memorable quality of Savannah, Paris and Old Philadelphia can be attributed as much as to the organized patterns of trees as to the architecture and urban design."

Henry Arnold, *Trees in Urban Design*,

A. INTRODUCTION

The BART Station Property is designed with "perimeter blocks" with buildings placed at the STREET along the outer edge of their sites. The LANDSCAPE STANDARDS ensure the coherence of blocks. They also serve to assist building owners and operators with understanding the relationship between the STREET and their own lots. The use of native plants and trees is mandatory; native trees and plants generally conserve water and require less maintenance than imported or exotic species.

B. General Principles

THE STREETSCAPE

- In the BART Station Property, the PUBLIC SPACE receives more emphasis than the individual buildings through its tree-lined corridors.
- STREET TREES are part of an overall STREETSCAPE plan designed to give special character to each PUBLIC SPACE and coherence to each area.
- The desired aesthetic shall be achieved through the use of native trees.

FRONTS AND BACKS

- Building FRONTS are the public "face" of every building. Owners are encouraged to place native landscaping plants and/or climbing vines along the area in front of their buildings. Planters and window boxes are also recommended.
- The walled off back areas allow building owners to utilize these spaces as efficient working environments unseen by the public.

C. Minimum Standards

THE STREETSCAPE

- Each street shall have a canopy of shade trees (STREET TREE) as shown on the REGULATING PLAN. Wherever the REGULATING PLAN does not show specific streetscape, STREET TREES shall be planted along the STREET TREE ALIGNMENT LINE at an average spacing not greater than 30 feet on center (measured per block face). At planting, trees shall be at least 3 inches in diameter (at chest height), and at least twelve (12) feet in overall height. Consult the TOWN ARCHITECT for the designated species for a particular PUBLIC SPACE.
- For special locations or lot configurations, the REGULATING PLAN may recommend or require additional plantings.
- Any unpaved ground area fronting the lots (to the curb) shall be covered with sod or planted with vegetation. Groundcovers may be used in place of turf grass.

ARCHITECTURAL REVIEW

The Pleasant Hill BART Station Property TOWN ARCHITECT shall administer an ARCHITECTURAL REVIEW PROCEDURE to execute this authority and to protect the value of all parcels within the BART Station Property. It is the responsibility of the TOWN ARCHITECT to review architectural and landscape plans for compliance with the Pleasant Hill BART Station Property Code and to provide design guidance when necessary. The TOWN ARCHITECT, under the direction of the Community Development Department, shall be responsible for interpreting and enforcing the Pleasant Hill BART Station Property Code regarding architectural and landscape standards, as well as any other standards not otherwise addressed and regulated by the County Code.

The TOWN ARCHITECT will make recommendations to the Community Development Department prior to consideration of Final Development Plans or modifications and to the Zoning Administrator prior to issuance of building permits.

The Pleasant Hill BART Station Property Code, which includes the Regulating Plan and the Building Envelope Standards, has been prepared for use in the Pleasant Hill BART Station Property. All copyrights and publishing rights are exclusively reserved by Geoffrey Ferrell Associates. The Contra Costa County Redevelopment Agency, BART, the Developers and Builders and Realtors, etceteras, and Lennertz Coyle and Associates L.L.C. are granted full use of this manual for the permitting, regulation, development, management and promotion of the Pleasant Hill BART Station Property, including copying and distribution to interested parties upon their request as a matter of public record.

All reproductions and publications of this manual, in whole or in part, shall carry the following credit: "**Geoffrey Ferrell Associates, Washington, D.C**." This manual may not be otherwise photocopied, in whole or in part, without the expressed written permission of Geoffrey Ferrell Associates, and may not be used for any other purposes whatsoever.

The Pleasant Hill BART Station Property Code is binding on all parties having an interest in any portion of the Property, and each owner is required to comply with the requirements set forth herein.

GEOFFREY FERRELL ASSOCIATES L.L.C.
19 14th Street S.E. Washington D.C. 20003 telephone (202) 547-7141 facsimile 547-7151
GEOFFFERRELL@STARPOWER.NET WWW.GEOFFREYFERRELL.COM